ROHS

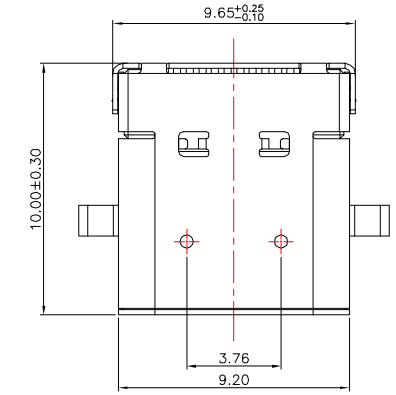

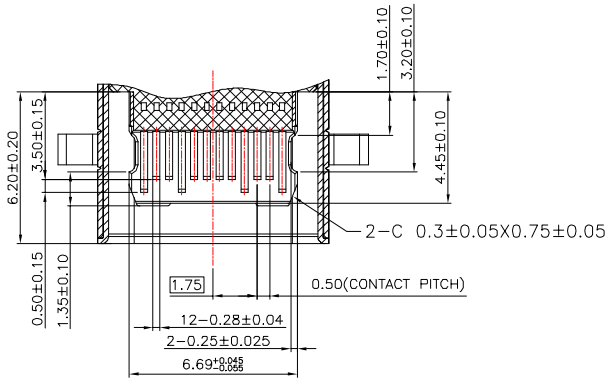

SECTION B−B

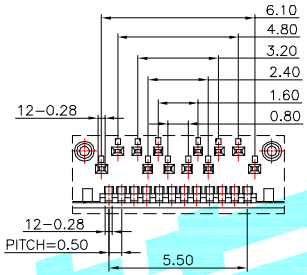

Detail A

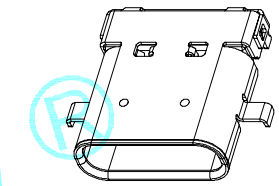

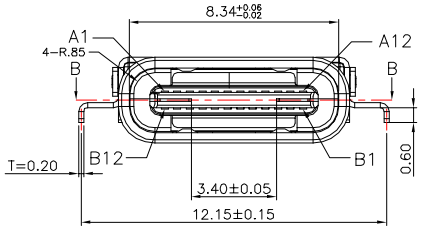

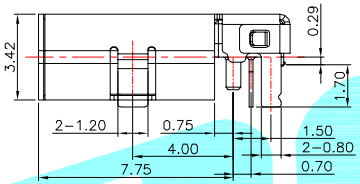

NOTE:

1. MATERIAL:
   1.1 INSULATOR: HIGH TEMPERATURE PLASTIC UL 94 V-0;
   1.2 CONTACT: COPPER ALLOY(T=0.15mm)
   1.3 SHELL:STAINLESS STEEL(T=0.20mm)
2. ELECTRICAL CHARACTERISTICS;
   2.1 CONTACT RESISTANCE: 40mΩ Max FOR INITIAL. 10mΩ CHANGE AFTER TEST. MEASURE AT 20mV, 100mA.
   2.2 CONTACT CURRENT RATING: 5A FOR V_{BUS} PIN; 1.25A FOR V_{CONN} PIN.
   2.3 DIELECTRIC WITHSTANDING VOLTAGE: 100V AC R.M.S.
   2.4 INSULATION RESISTANCE 100MΩ Min
   2.5 OPERATING TEMPERATURE: -40° C ～ 85° C
3 MECHANICAL CHARACTERISTICS:
   3.1 MATING FORCE: 5~20 N.
   3.2 UNMATED FORCE: 8~20N AFTER TEST
   3.3 DURABILITY: 10,000 CYCLES
4. PLATING
   4.1 TERMINAL CONTACT: (SEE TAB) GOLD PLATING ALL OVER 50u″ Min NICKEL AND 80u″Min Tin ALL OVER 50u″ Min NICKEL ON SOLDER AREA
   4.2 SHELL: 50u″ Min. NICKEL ALL OVER,

Pin	Signal Name	Mating Sequence	Pin	Signal Name	Mating Sequence
A1	GND	First	B12	GND	First
A2	SSTXp1	Second	B11	SSRXp1	Second
A3	SSTXn1	Second	B10	SSRXn1	Second
A4	V_{BUS}	First	B9	V_{BUS}	First
A5	CC1	Second	B8	SBU2	Second
A6	Dp1	Second	B7	Dn2	Second
A7	Dn1	Second	B6	Dp2	Second
A8	SBU1	Second	B5	CC2	Second
A9	V_{BUS}	First	B4	V_{BUS}	First
A10	SSRXn2	Second	B3	SSTXn2	Second
A11	SSRXn2	Second	B2	SSTXn2	Second
A12	GND	First	B1	GND	First
SHELL		GND	SHELL		GND

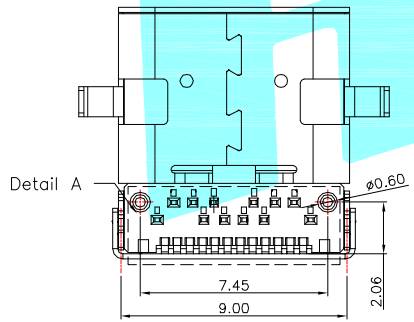

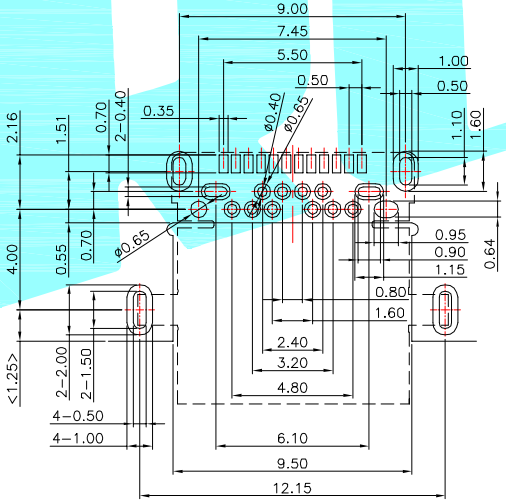

RECOMMEND P.C.B LAYOUT(COMPONENT SIDE)

TOLERANCE FOR PCB LAYOUT IS ± 0.05

KEEP OUT AREA

ITEM	PART NAME	TER'NO.	QTY.	MATERIAL	FINISHING	REMARK
③	Shell	——	1	STAINLESS STEEL	Ni Plated	——
②	Contact	——	24	COPPER ALLOY	Au Plated	——
①	Housing	——	1	LCP	Black	——

APPROVALS		DATE	HRO 韩荣 ELECTRONICS CO.,LTD		
DRAWN	JKUN.LU	2014.5.29			
CHECKED			TITLE:	USB CONNECTOR	
APPROVALS			PART NO.	TYPE−C−31−M−01	
TOLERANCES ARE	30~以上 ±0.30; 10~30 ±0.25; 5~10 ±0.20; ~ 5 ±0.15	ANGLE ±2°	UNIT: mm	SCALE: 1:1	PROJ:
			DRAWING NO.	——	SHEET 1 OF 1

ECN NO.	REV.	DATE.	DESCRIPTION.	CHANGE.	CHECK.	APPRO.
——	A	——	NEW	——	——	——