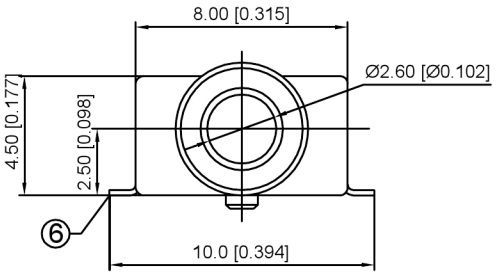

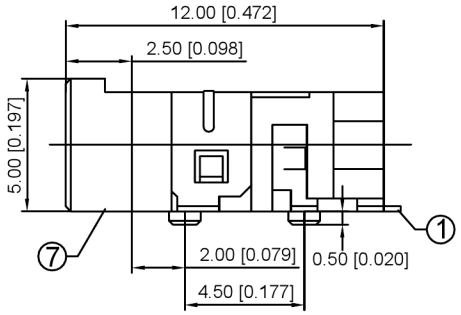

P.C.B LAYOUT
TOP VIEW

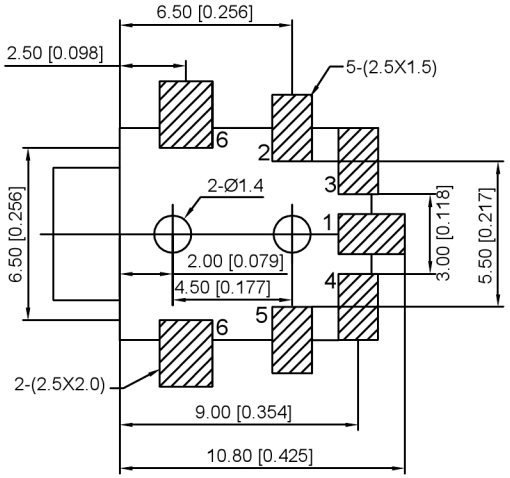

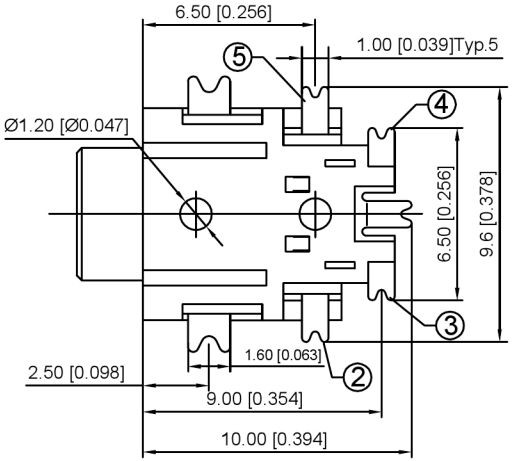

SPECIFICATION

1.Rating：DC 30V 1.0A;
2.Contact resistance：≤0.03Ω;
3.Insulation resistance：≥100MΩ (DC250V);
4.Withstand voltage：500VAC；
5.Insertion and extraction force：3-20N;
6.life test：5,000 cycles。

SCHEMATIC

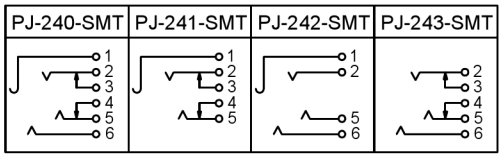

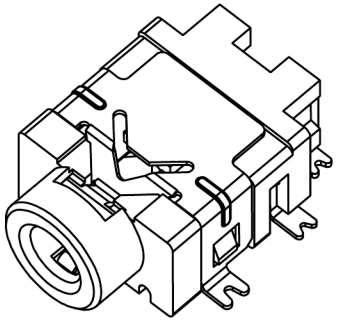

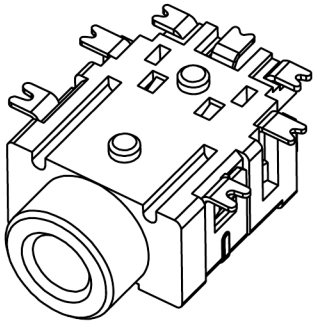

	MATERIAL	PLATING
terminal 1	SUS	silver
terminal 2	SUS	silver
terminal 3	Brass	silver
terminal 4	Brass	silver
terminal 5	SUS	silver
terminal 6	Phosphor Bronze	silver
plastic	PA9T	

广东星坤科技股份有限公司
文件工程章

MARK	DESCRIPTION	DATE	REVISED	APPROVED
Δx				
Δx				
Δx				

REVISIONS

ANGLAR	±5°
L≤ 4	±0.2
4<L≤ 16	±0.3
16<L≤ 63	±0.4
L> 63	±0.5

UNSPECIFIED TOLERANCES

www.helloxkb.com www.helloxkb.cn www.xk-dg.cn

XKB INDUSTRIAL PRECISION CO.,LIMITED

DSND		SCALE: N/A	MODEL TYPE: 2.5 PHONE JACK
DWN		VIEW:	PART NO.: PJ-24X-SMT
CHKD		UNIT: mm/in	DWG NO.:
APPD		SIZE: A4	

WEIGHT	SHEET	REVISIC
	1/1	A0