RoHS Complied

SPECIFIATIONS:
1.RATING: 12V, 1A .
2.CONTACT RESISTANCE:30mΩ OR LESSFOR INITIAL
3.VOLTAGE PROOF:500V AC FOR ONE MINUTE
4.DURABILITY: 5,000 INSERTION/EXTRACTION CYCLES
5.INSETION FORCE:3.0KG MAX
6.WITHDRAWAL FORCE:0.3KG MIN
7.WATER PROOFNESS: THIS PRODUCT IS BASED ON IPX7(1m,30min)
8.USING PLUG: Φ3.5MM、3-POLE STEREO
9. OVAL RING
9-1. Hardness of silicone rubber:70°
9-2. Horizontal flash 0.10mm max;Longitudinal flash 0.10mm max
10.HOUSING WITH O-RING'S SEAL AREA BURRS IS 0.05mm MAX.
11.FOR REFLOW SOLDERING LEAD-FREE PROCESS.
12.PACKAGING: TAPE & REEL.

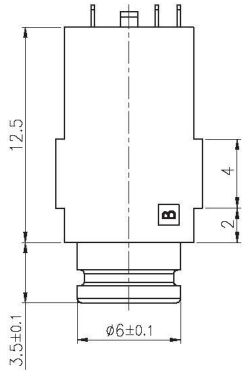

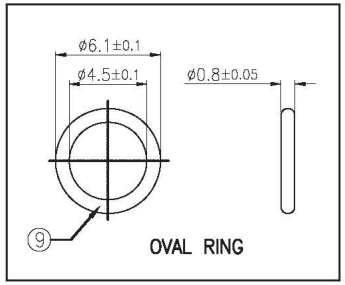

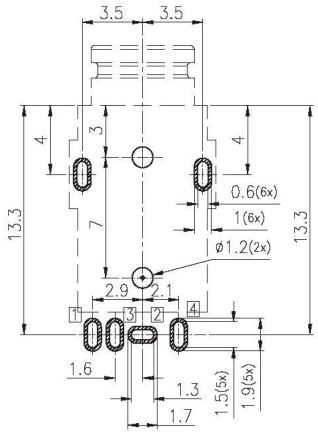

Recommended PCB Layout(T=1.2)
Tolerance: ±0.05(TOP view)

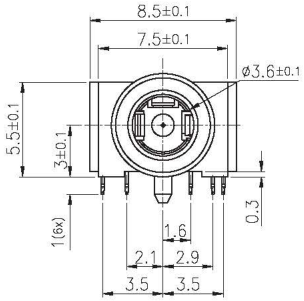

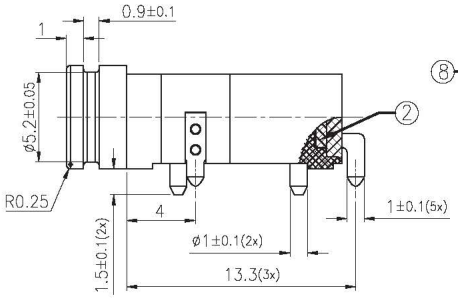

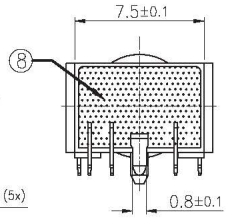

SCHEMATIC	AFTER PLUG IN
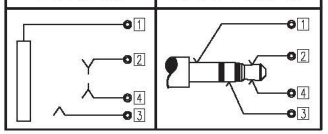	

□ : TERMINAL NO.

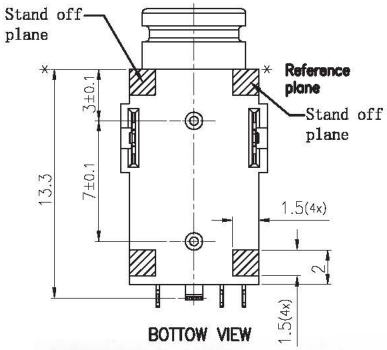

BOTTOW VIEW

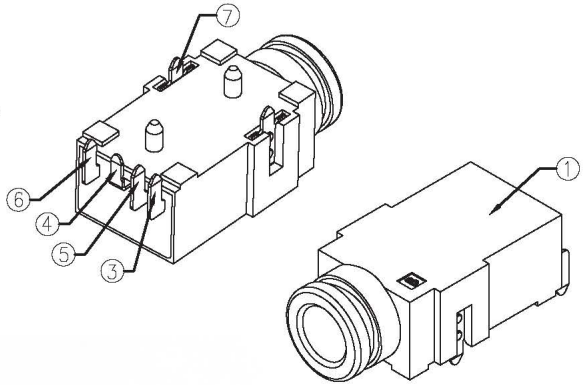

ITEM	PART NAME	TERMINAL	QTY	MATERIAL	REMARK
9	OVAL RING	----	1	SILICONE	GREEN
8	BOND	----	1	EPOXY	----
7	TERMINAL	----	2	C2680R-H T=0.2	Matte Sn 80u" Min; Ni 40u" Min underplate
6	TIP SPRING-2	4	1	C5210R-EH T=0.2	
5	RING SPRING	3	1	C5210R-EH T=0.2	
4	TIP SPRING-1	2	1	C5210R-EH T=0.2	
3	EARTH SPRING	1	1	C5210R-EH T=0.2	
2	COVER	----	1	PA9T+33%GF(GN2330)	UL 94V-0
1	HOUSING	----	1	PA9T+33%GF(GN2330)	UL 94V-0

For and on behalf of
XKB INDUSTRIAL PRECISION CO., LIMITED
香港星坤工業精密有限公司

MARK	DESCRIPTION	DATE	REVISED	APPROVED
△X				
△X				
△X				

REVISIONS

Authorised Signature(s)

ANGULAR	±5°
L≤4	±0.2
4< L≤16	±0.3
16< L≤63	±0.4
L> 63	±0.5

UNSPECIFIED TOLERANCES

DSND		DATE		SCALE: N/A
DWN		DATE		VIEW:
CHKD		DATE		UNIT: mm
APPD		DATE		SIZE: A4

XKB INDUSTRIAL PRECISION CO., LIMITED

MODEL TYPE: 3.5 PHONE JACK
PART NO.: PJ-32434
DWG NO.: PJ-32434

WEIGHT	SHEET	REVISION
1.0g	1/1	A0

THIS DOCUMENT IS THE PROPERTY OF CHUNSHENG ELECTRONICS CO.,LTD.,NO PART THEREOF MAY BE REPRODUCED AND USED WITHOUT THE PRIOR WRITTEN CONSENT OF THE OWNER