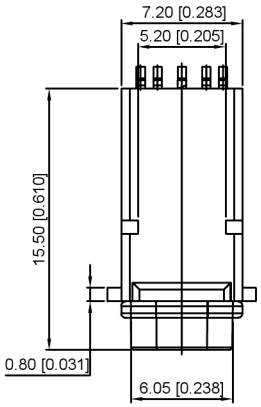

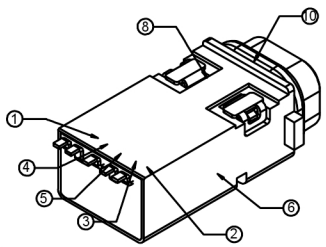

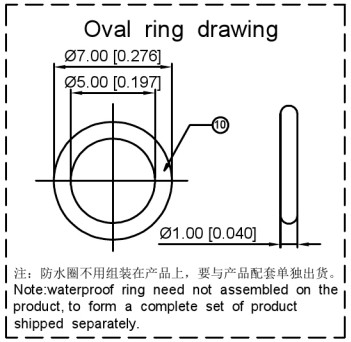

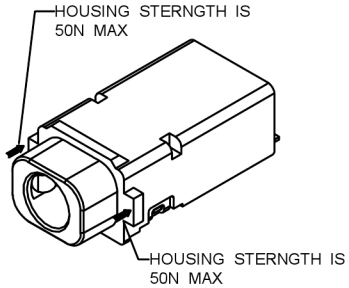

SPECIFIATIONS:
1.INSULATION RESISTANCE:A VOLTAGE OF 500V D.C. SHALL BE APPLIED TO THE TERMINALS, AFTER WHICH MEASUREMENT SHALL BE MADE, A GAUGE FOR THE MEASUREMENT SHALL BE USED THE INSULATEDGAUGE.
2.CONTACT RESISTANCE: 30mΩ OR LESS.
3.VOLTAGE PROOF:500V AC FOR ONE MINUTE.
4.DURABILITY:5,000 INSERTION/REMOVAL CYCLES(MINIMUM).
5.INSETION FORCE:0.6KGF~2.0KGF.
6.WITHDRAWAL FORCE:0.6KGF~2.0KGF.
7.WATER PROOFNESS:THIS PRODUCT IS BASED ON IPX5/7 OF THE JIS STANDARD.
8.USING PLUG:Ø3.5MM、4-*POLE STEREO EARPHONE(LCH/RCH/GND/MIC) PROVIDED THAT THEY CONFORM TO JIS C6560.
9.HOUSING STERNGTH IS 50N MAX.

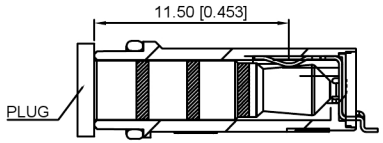

SEC:B-B
Image of plug match with contact point

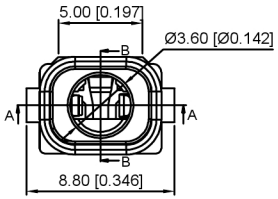

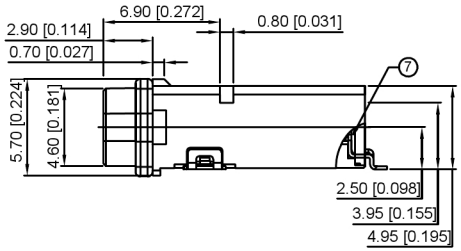

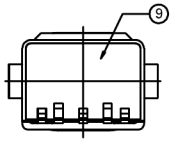

SCHEMATIC	AFTER PLUG IN
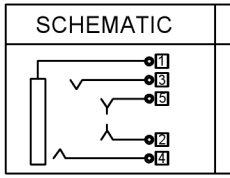	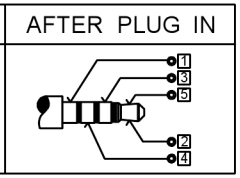

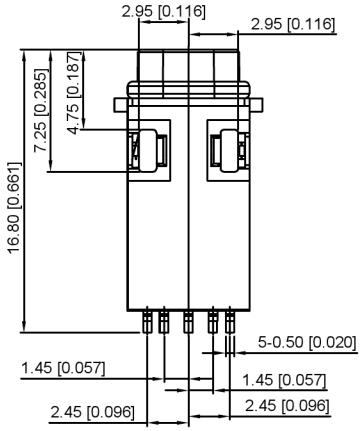

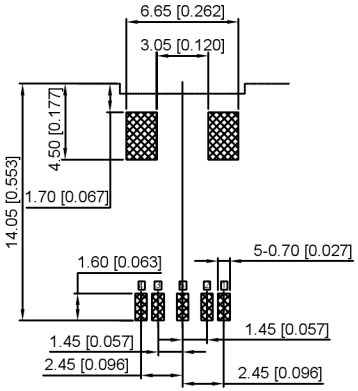

Recommended PCB Layout
Tolerance: ±0.1(Top view)

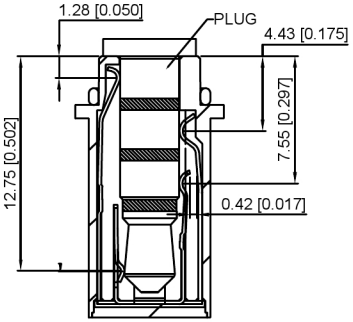

SEC :A-A
Image of plug match with contact point

10	Oval ring	———	———	———
9	BOND	———	———	———
8	TERMINAL	———		Au PLATED
7	COVER	HIGH TEMP	BLACK	UL 94V-0
6	HOUSING	HIGH TEMP	BLACK	UL 94V-0
5	TERMINAL 5	COPPER ALLOY		Au PLATED
4	TERMINAL 4	COPPER ALLOY		Au PLATED
3	TERMINAL 3	COPPER ALLOY		Au PLATED
2	TERMINAL 2	COPPER ALLOY		Au PLATED
1	TERMINAL 1	COPPER ALLOY		Au PLATED

广东星坤科技股份有限公司
文件工程章

MARK	DESCRIPTION	DATE	REVISED	APPROVED
ΔX				
ΔX				
ΔX				

REVISIONS

ANGLAR	±5°
L≤ 4	±0.2
4<L≤ 16	±0.3
16<L≤ 63	±0.4
L> 63	±0.5

UNSPECIFIED TOLERANCES

www.helloxkb.com www.helloxkb.cn www.xk-dg.cn

XKB INDUSTRIAL PRECISION CO.,LIMITED

DSND		SCALE: N/A	MODEL TYPE: 3.5 PHONE JACK
DWN		VIEW:	PART NO.: PJ-3255
CHKD		UNIT: mm/in	DWG NO.:
APPD		SIZE: A4	

WEIGHT	SHEET	REVISIC
	1/1	A0