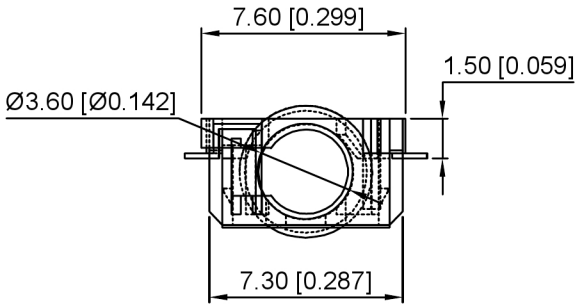

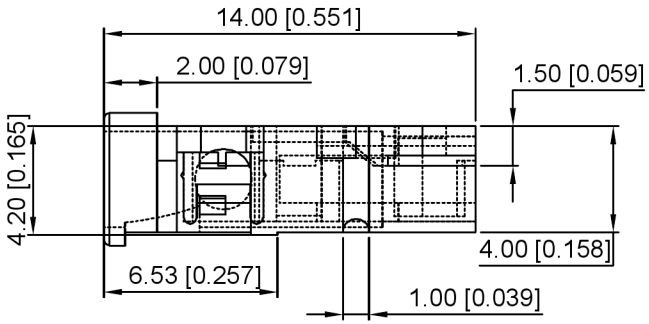

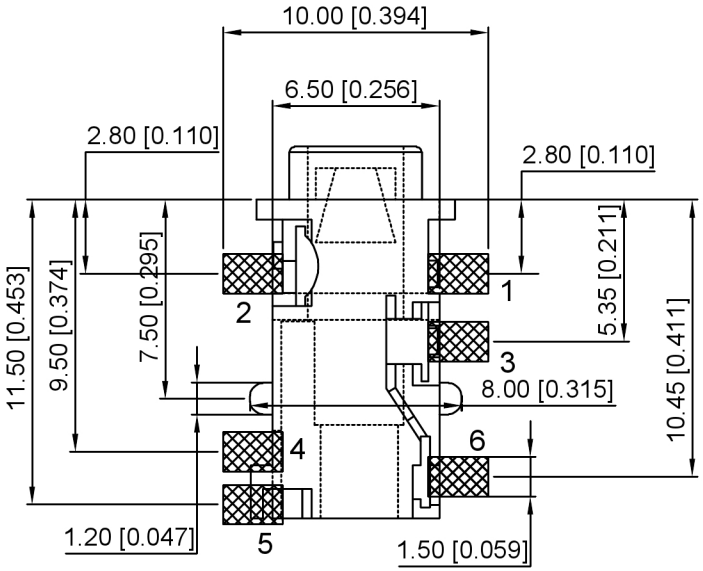

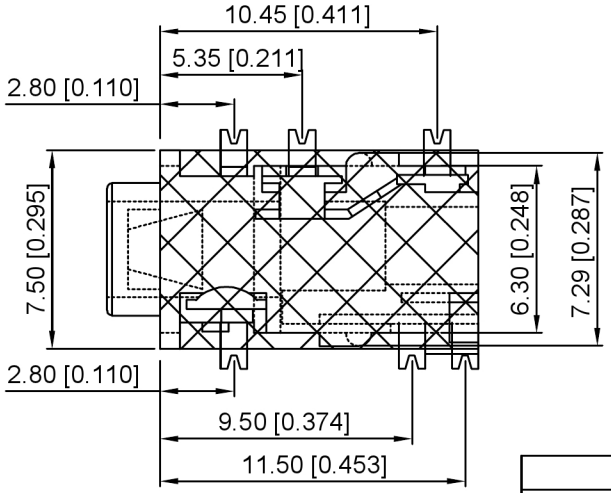

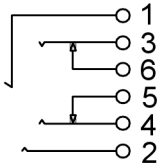

	MATERIAL	PLATING
terminal 1	Phosphor Bronze	Gold
terminal 2	Phosphor Bronze	Gold
terminal 3	Phosphor Bronze	Gold
terminal 4	Phosphor Bronze	Gold
terminal 5	Phosphor Bronze	Gold
terminal 6	Phosphor Bronze	Gold
plastic	High Temp. Thermoplastic	

广东星坤科技股份有限公司
文件工程章

MARK	DESCRIPTION	DATE	REVISED	APPROVED
Δx				
Δx				
Δx				

REVISIONS

ANGLAR	±5°
L≤ 4	±0.2
4<L≤ 16	±0.3
16<L≤ 63	±0.4
L> 63	±0.5

UNSPECIFIED TOLERANCES

www.helloxkb.com www.helloxkb.cn www.xk-dg.cn

XKB INDUSTRIAL PRECISION CO.,LIMITED

DSND		SCALE: N/A	MODEL TYPE: 3.5 PHONE JACK
DWN		VIEW:	PART NO.: PJ-342C
CHKD		UNIT: mm/in	DWG NO.:
APPD		SIZE: A4	

WEIGHT	SHEET	REVISIC
	1/1	A0