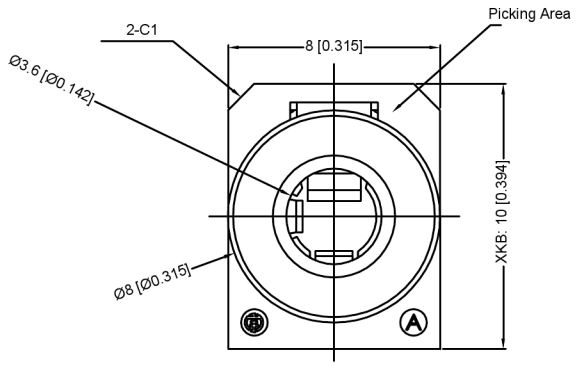

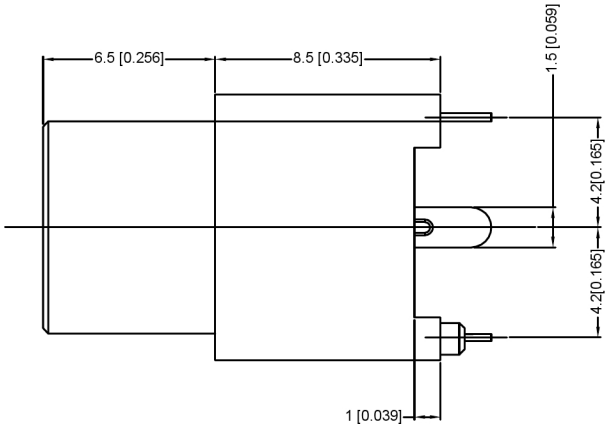

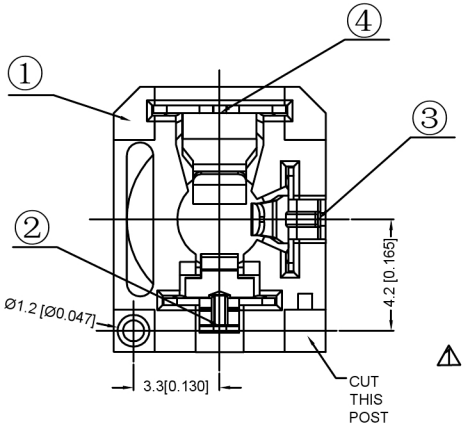

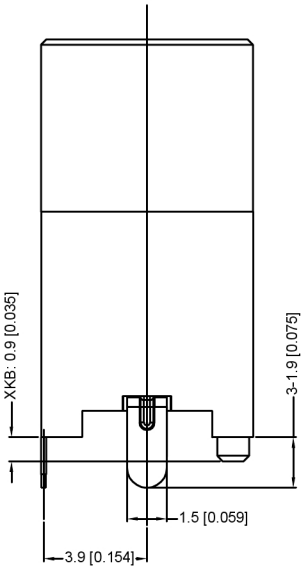

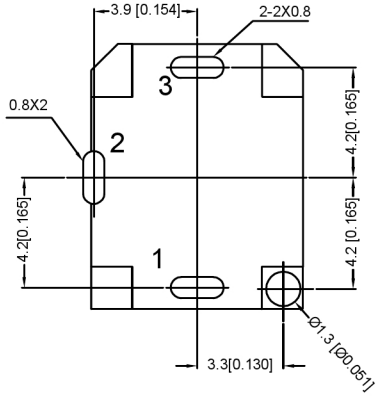

PCB HOLES(TOP VIEW) t=1.2mm

NOTE:GENERAL TOLERANCE:±0.05mm

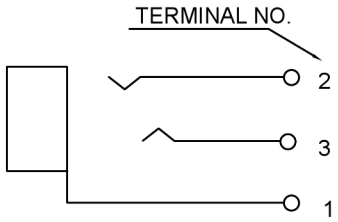

SCHEMATIC

	MATERIAL		PLATING
TIP SPRING	PHOSPHOR BRONZE	t=0.3	Sn
RING SPRING	PHOSPHOR BRONZE	t=0.2	Sn
SLEEVE SPRING	PHOSPHOR BRONZE	t=0.25	Sn
HOUSING	HIGH TEMP.THERMOPLASTIC UL94V-0		GRAY

广东星坤科技股份有限公司
文件工程章

MARK	DESCRIPTION	DATE	REVISED	APPROVED
ΔX				
ΔX				
ΔX				

REVISIONS

www.helloxkb.com www.helloxkb.com www.xk-dg.cn

ANGLAR	±5°
L≤ 4	±0.2
4<L≤ 16	±0.3
16<L≤ 63	±0.4
L> 63	±0.5

UNSPECIFIED TOLERANCES

XKB INDUSTRIAL PRECISION CO.,LIMITED

DSND		SCALE: N/A	MODEL TYPE: 3.5 PHONE JACK
DWN		VIEW:	PART NO.: PJ-3543
CHKD		UNIT: mm/in	DWG NO.:
APPD		SIZE: A4	

WEIGHT	SHEET	REVISIC
	1/1	A0